Mechanical Drawing of VCL-2728-R 1PPS / IRIG-B Distribution Unit-Receive

VCL-2728	
Mechanical Dimensions	
Width	168.0 MM
Height	42.0 MM
Depth	84.0 MM
Weight	.4kg

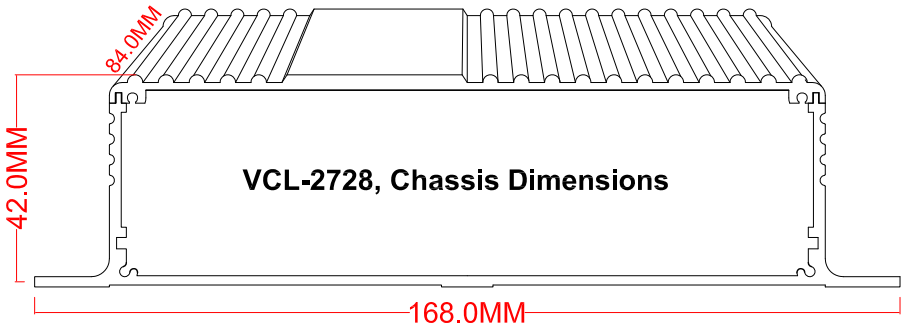

Front View

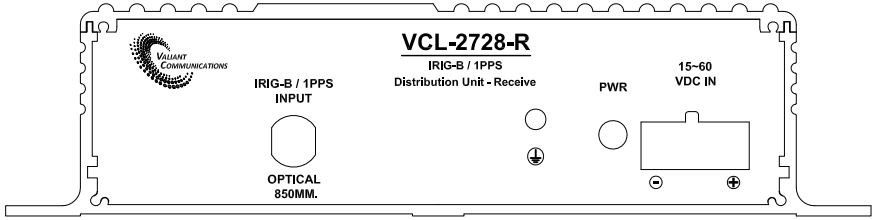

Rear View

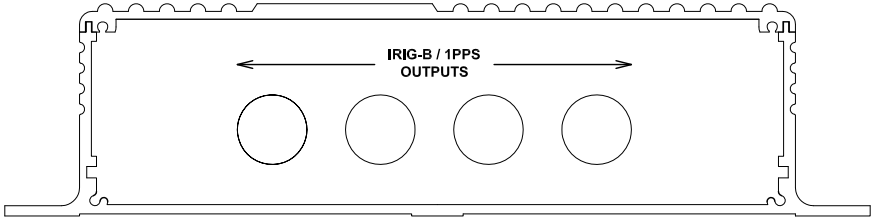

The Drawing and any information or descriptive matter set out hereon are the confidential property of Valiant Communications and must not be disclosed, loaned, copied, used for manufacturing, tendering or any other purpose without their written permission.

APPR. CHECK DATE REVISION CHECK CHECK NAME DATE REVISION

Title: Mechanical Drawing of VCL-2728-R 1PPS / IRIG-B Distribution Unit - Receive	Valiant Communications	**Drawing No:** EMD-2728/1PPS/ IRIG-B/001	Date	Rev	Sheet 01
			March 21, 2023	02	Next Sheet 02

Mechanical Drawing of VCL-2728-R 1PPS / IRIG-B Distribution Unit - Receive

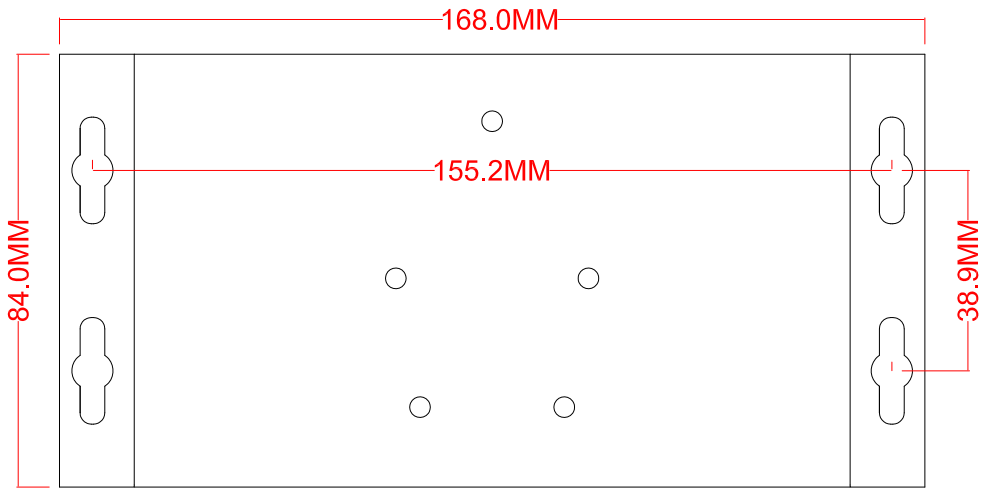

Bottom View

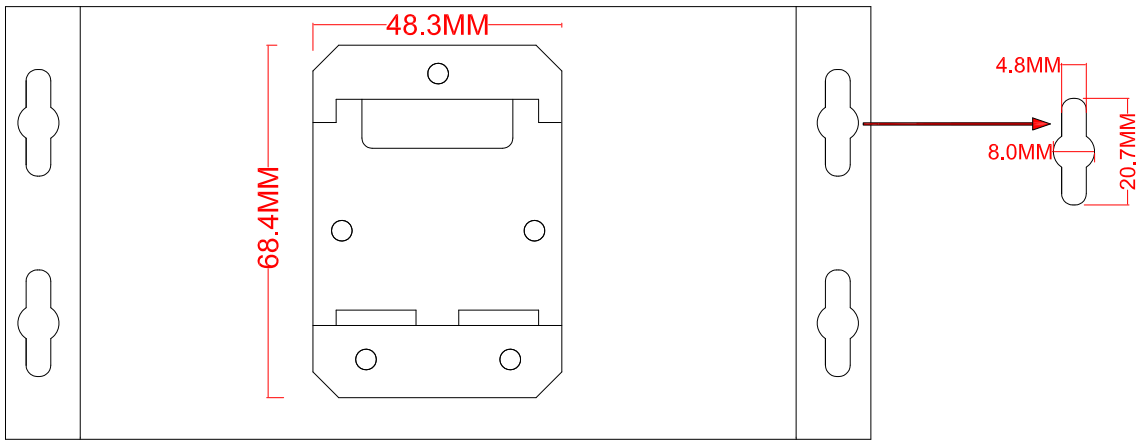

Bottom View with DIN Rail

VCL-2728 Bottom View	
Mechanical Dimensions	
Width	168.0 MM
Height	84.0 MM

The Drawing and any information or descriptive matter set out hereon are the confidential property of Valiant Communications and must not be disclosed, loaned, copied, used for manufacturing, tendering or any other purpose without their written permission.

Title: Mechanical Drawing of VCL-2728-R 1PPS / IRIG-B Distribution Unit - Receive	Valiant Communications	**Drawing No:** EMD-2728/1PPS/ IRIG-B/001	Date	Rev	Sheet 02
			March 21, 2023	02	Next Sheet END